SINCE 1909
JAPAN

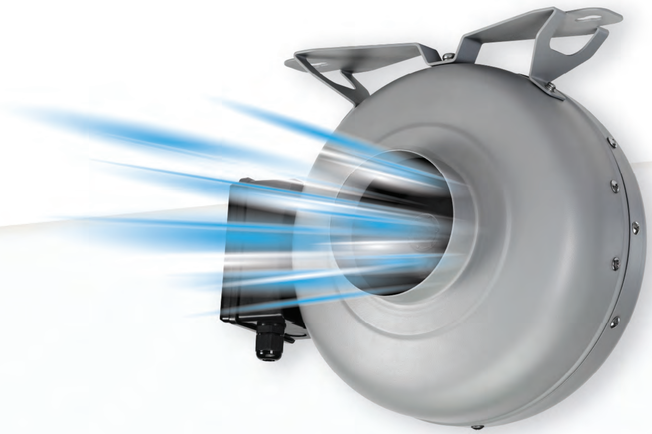

In-line Centrifugal Fan

Built to move air, built to last

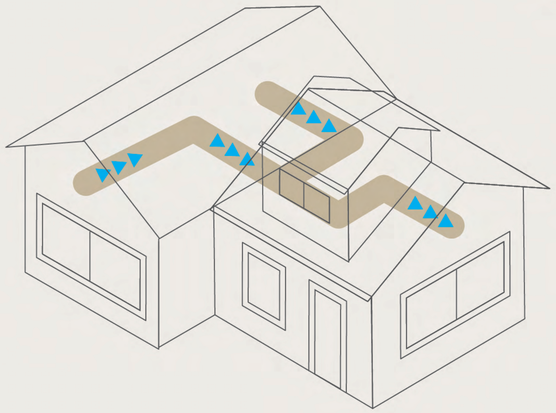

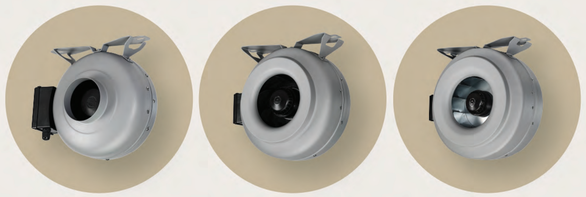

SINCE 1909
JAPAN

KDK Company, Division of PES
4017, Takaki-cho, Kasugsi, Aichi, Japan
http://kdk.jp

• Actual colors may vary slighty from those shown.
• Specifications are subject to change without prior notice.

CATALOG NO: K-K-AME005
07. 2025

In-line Centrifugal Fan

Built to move air, built to last.

High Performance

Long Life

Low-Noise

Safe

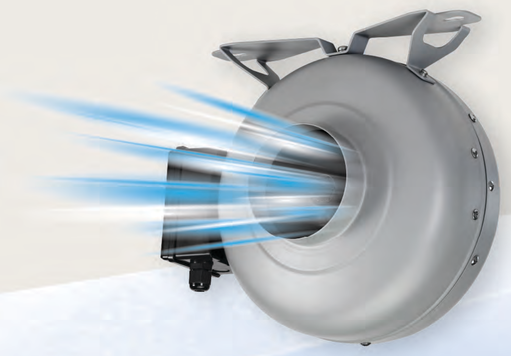

Installation Simulation

(Mount above ceiling)

Features

High Precision Engineering

Features a high-performance external rotor motor, integrated thermal protector, and premium ball bearings to ensure consistent and dependable operation.

Long Life

Long Operational Lifespan

Engineered for longevity, supporting continuous use for up to 40,000 hours.

Dust & Water-resistant

Robust Protection

IP44-rated enclosure safeguards against dust and water ingress for reliable operation in demanding environments.

Low Noise & Vibration

Double-sided dynamically balanced fan blades provide smooth, quiet, and vibration-free performance.

10MMA/12MMA/15MMA/ 16MMA/20MMA/25MMA

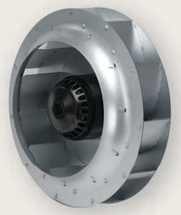

31MMA

Optimized Airflow Design

Centrifugal structure with Class F insulation above for enhanced performance and safety.

In-line Centrifugal Fan

Performance Data

10MMA

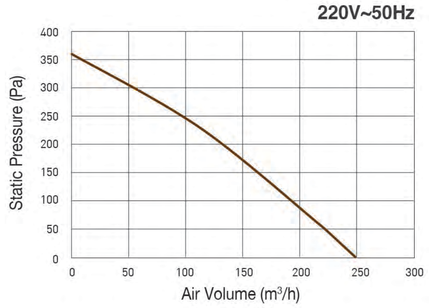

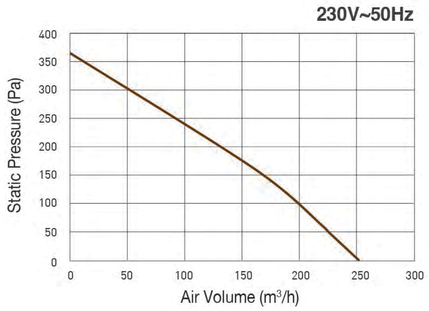

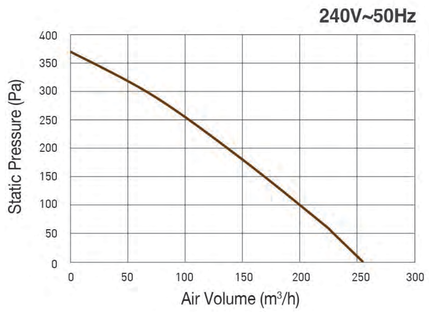

Dimension

Unit : mm

A	B	C	D	E	ØF	G
285	258	137	213	26	97	196

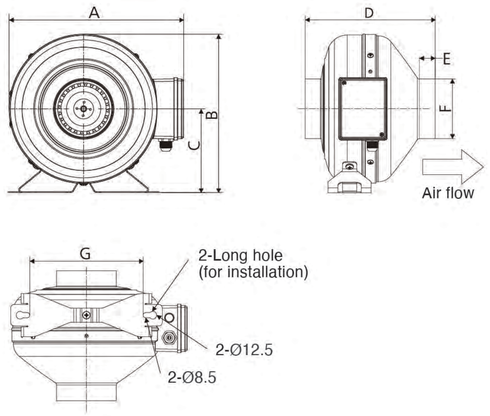

Specification

Model	Voltage [V]	Frequency [Hz]	Air Volume [CMH]	Air Volume [CFM]	Consumption [W]	Noise [dB(A)]	Weight [kg]	Duct Size [mm]
10MMA	220	50	249	146	51	44	3.1	Ø100
	230		252	148	54	44		
	240		255	150	57	44		

Notes：
1.The values of rated input, air volume and noise are specified at the static pressure of 0 Pa.
2.The values of noise level is A weighted average sound pressure level, the mean value are measured by our company.
3.The values of noise level are measured at the 1.5 m apart from the inspection panel of the fan body when ducts are connected on both inlet and outlet side. It is on the assumption that the noise of fan body propagates to room inside.
4.The values of air volume are the mid-points of results measured by our company.

Performance Data

12MMA

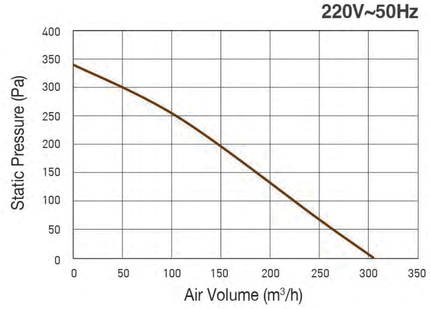

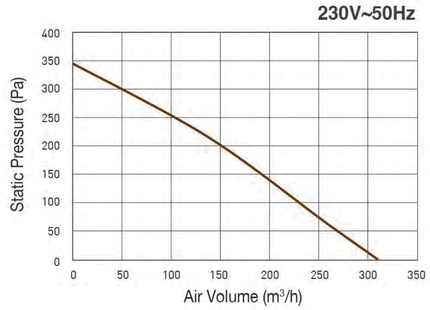

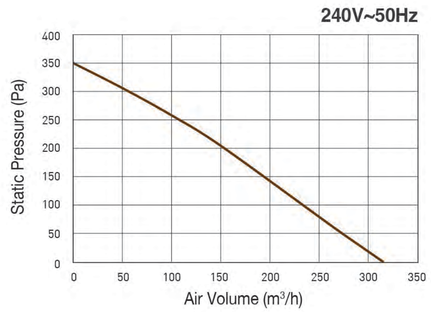

Dimension

Unit : mm

A	B	C	D	E	ØF	G
285	258	137	203	26	123	196

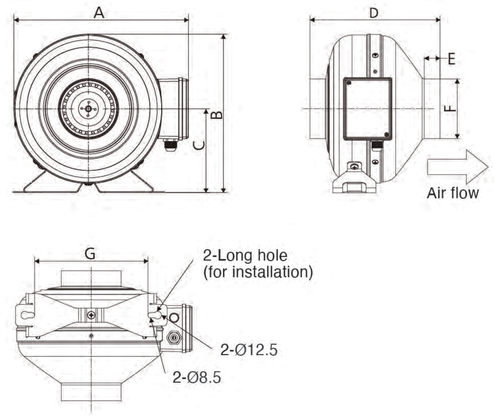

Specification

Model	Voltage [V]	Frequency [Hz]	Air Volume [CMH]	Air Volume [CFM]	Consumption [W]	Noise [dB(A)]	Weight [kg]	Duct Size [mm]
12MMA	220	50	305	179	52	45	3.0	Ø125
	230		310	182	55	45		
	240		315	185	58	45		

Notes：
1.The values of rated input, air volume and noise are specified at the static pressure of 0 Pa.
2.The values of noise level is A weighted average sound pressure level, the mean value are measured by our company.
3.The values of noise level are measured at the 1.5 m apart from the inspection panel of the fan body when ducts are connected on both inlet and outlet side. It is on the assumption that the noise of fan body propagates to room inside.
4.The values of air volume are the mid-points of results measured by our company.

In-line Centrifugal Fan

Performance Data

15MMA

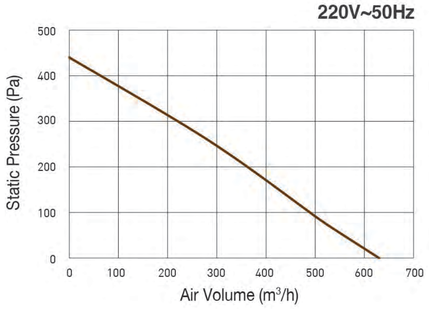

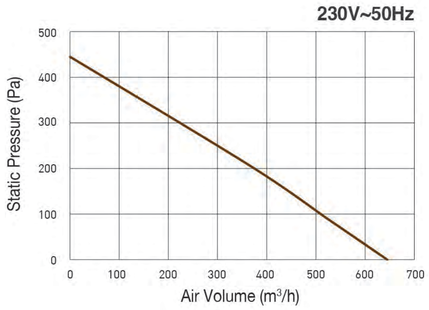

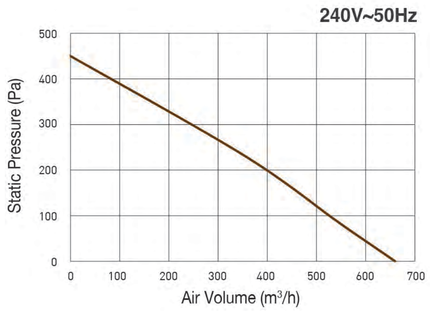

Dimension

Unit : mm

A	B	C	D	E	ØF	G
375	348	181	266	25	147	267

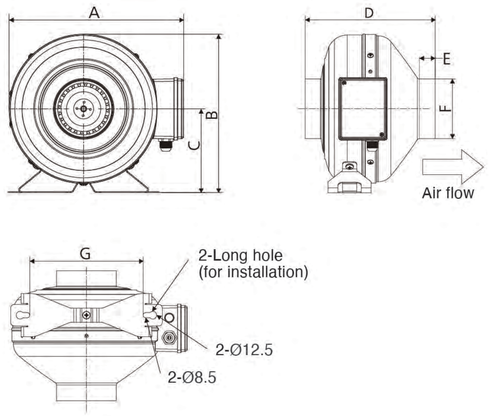

Specification

Model	Voltage [V]	Frequency [Hz]	Air Volume [CMH]	Air Volume [CFM]	Consumption [W]	Noise [dB(A)]	Weight [kg]	Duct Size [mm]
15MMA	220	50	630	370	88	46	4.4	Ø150
	230		645	379	92	46		
	240		660	388	97	46		

Notes：
1.The values of rated input, air volume and noise are specified at the static pressure of 0 Pa.
2.The values of noise level is A weighted average sound pressure level, the mean value are measured by our company.
3.The values of noise level are measured at the 1.5 m apart from the inspection panel of the fan body when ducts are connected on both inlet and outlet side. It is on the assumption that the noise of fan body propagates to room inside.
4.The values of air volume are the mid-points of results measured by our company.

Performance Data

16MMA

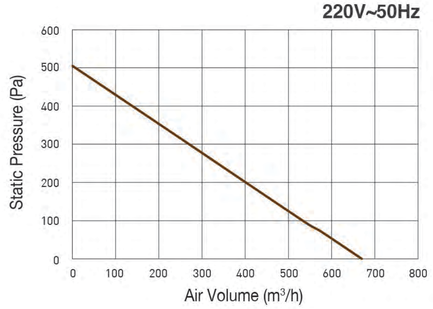

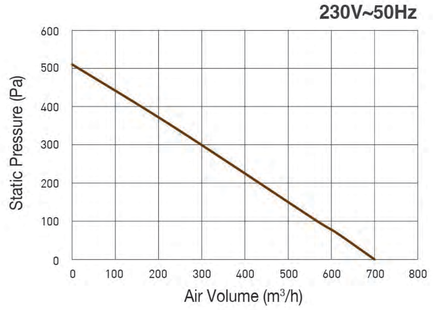

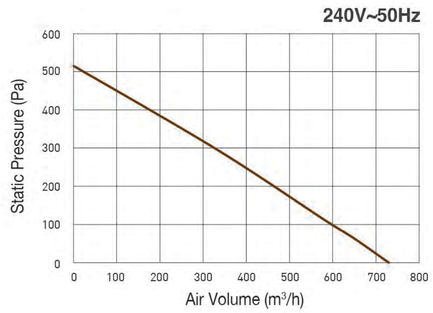

Dimension

Unit : mm

A	B	C	D	E	ØF	G
375	348	181	260	25	157	267

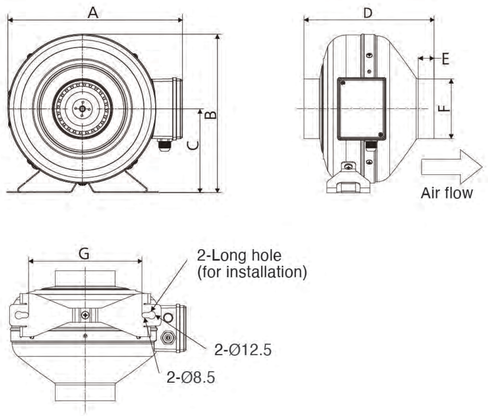

Specification

Model	Voltage [V]	Frequency [Hz]	Air Volume [CMH]	Air Volume [CFM]	Consumption [W]	Noise [dB(A)]	Weight [kg]	Duct Size [mm]
16MMA	220	50	670	394	116	47	4.7	Ø160
	230		700	412	122	47		
	240		730	429	128	47		

Notes：
1.The values of rated input, air volume and noise are specified at the static pressure of 0 Pa.
2.The values of noise level is A weighted average sound pressure level, the mean value are measured by our company.
3.The values of noise level are measured at the 1.5 m apart from the inspection panel of the fan body when ducts are connected on both inlet and outlet side. It is on the assumption that the noise of fan body propagates to room inside.
4.The values of air volume are the mid-points of results measured by our company.

In-line Centrifugal Fan

Performance Data

20MMA

220V~50Hz

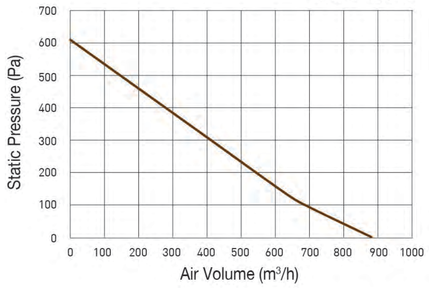

230V~50Hz

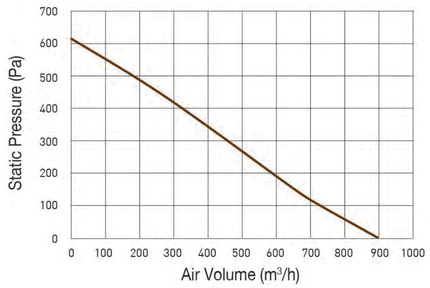

240V~50Hz

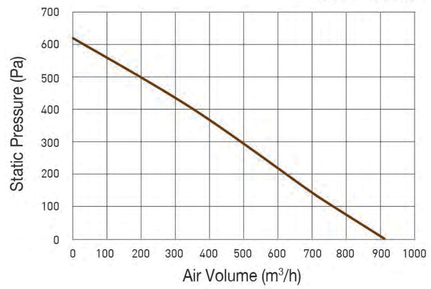

Dimension

Unit : mm

A	B	C	D	E	ØF	G
375	348	181	245	25	197	267

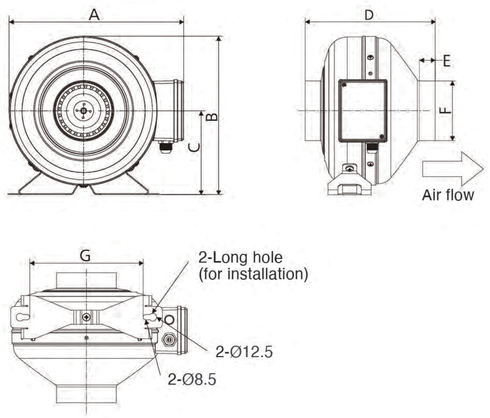

Specification

Model	Voltage [V]	Frequency [Hz]	Air Volume [CMH]	Air Volume [CFM]	Consumption [W]	Noise [dB(A)]	Weight [kg]	Duct Size [mm]
20MMA	220	50	882	519	160	54	5.2	Ø200
	230		897	527	166	54		
	240		912	536	174	54		

Notes：
1.The values of rated input, air volume and noise are specified at the static pressure of 0 Pa.
2.The values of noise level is A weighted average sound pressure level, the mean value are measured by our company.
3.The values of noise level are measured at the 1.5 m apart from the inspection panel of the fan body when ducts are connected on both inlet and outlet side. It is on the assumption that the noise of fan body propagates to room inside.
4.The values of air volume are the mid-points of results measured by our company.

Performance Data

25MMA

220V~50Hz

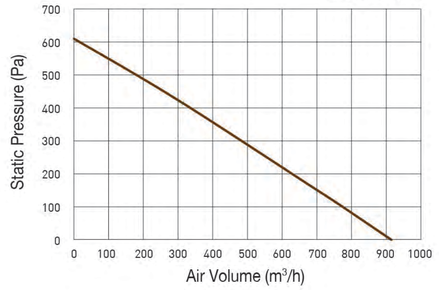

230V~50Hz

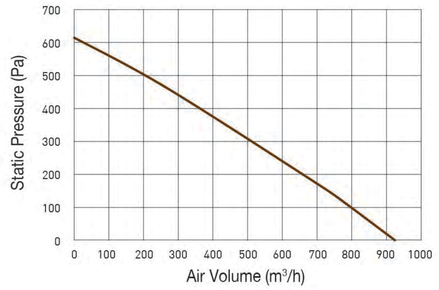

240V~50Hz

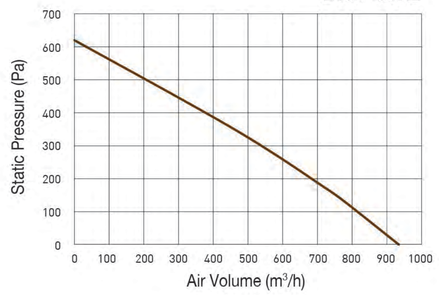

Dimension

Unit : mm

A	B	C	D	E	ØF	G
375	348	181	219	25	247	267

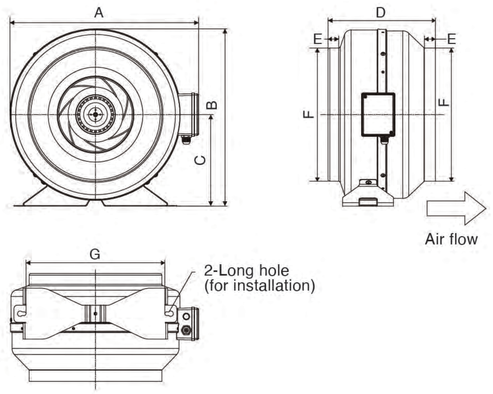

Specification

Model	Voltage [V]	Frequency [Hz]	Air Volume [CMH]	Air Volume [CFM]	Consumption [W]	Noise [dB(A)]	Weight [kg]	Duct Size [mm]
25MMA	220	50	915	538	150	55	5.2	Ø250
	230		925	544	157	55		
	240		935	550	165	55		

Notes：
1.The values of rated input, air volume and noise are specified at the static pressure of 0 Pa.
2.The values of noise level is A weighted average sound pressure level, the mean value are measured by our company.
3.The values of noise level are measured at the 1.5 m apart from the inspection panel of the fan body when ducts are connected on both inlet and outlet side. It is on the assumption that the noise of fan body propagates to room inside.
4.The values of air volume are the mid-points of results measured by our company.

In-line Centrifugal Fan

Performance Data

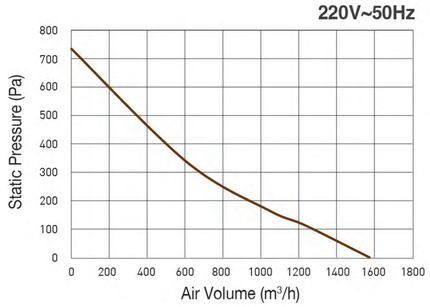

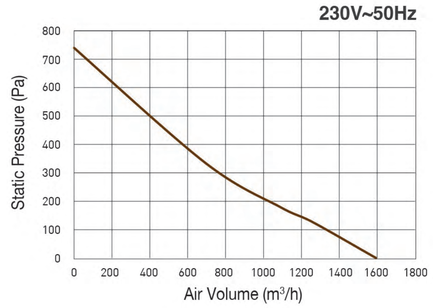

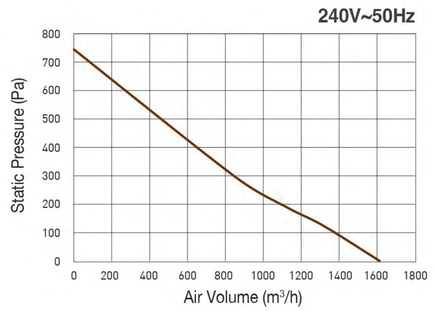

31MMA

Dimension

Unit : mm

A	B	C	D	E	ØF	G
445	416	215	255	26	313	327

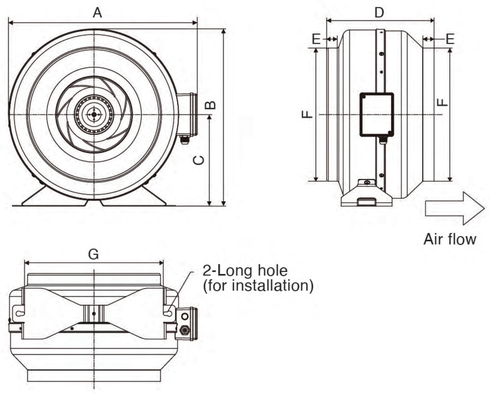

Specification

Model	Voltage [V]	Frequency [Hz]	Air Volume [CMH]	Air Volume [CFM]	Consumption [W]	Noise [dB(A)]	Weight [kg]	Duct Size [mm]
31MMA	220	50	1,575	927	215	57	6.9	Ø315
	230		1,595	938	226	57		
	240		1,615	950	238	57		

Notes：
1.The values of rated input, air volume and noise are specified at the static pressure of 0 Pa.
2.The values of noise level is A weighted average sound pressure level, the mean value are measured by our company.
3.The values of noise level are measured at the 1.5 m apart from the inspection panel of the fan body when ducts are connected on both inlet and outlet side. It is on the assumption that the noise of fan body propagates to room inside.
4.The values of air volume are the mid-points of results measured by our company.